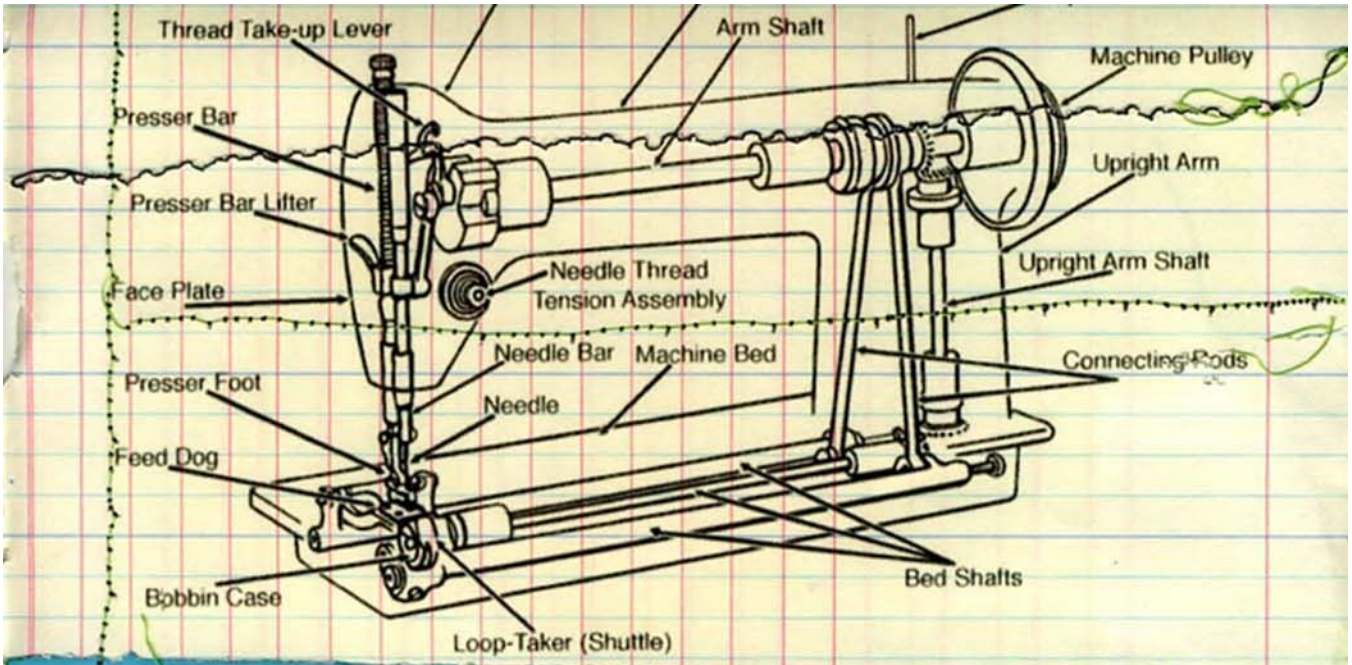

Worn Again Jr.

A recycled fashion competition for ages 8-15

Part of Team Worn Again's Night of Recycled Creativity
Benefiting Recycle for the Arts
June 27th @ the REPUBLIC

Free sewing tutorials leading up to the event at
Recycle for the Arts

Please contact Karen Kempf @ recycle4thearts@gmail.com
For tutorial info.

To participate and for more info:

wornagain@gmail.com

Registration deadline May 10th